GUARD POSTS & SECURITY

10FT CONTAINER GUARD POST

SKU ARK-PJ10-STD | 10ft | Used Grade A | Ready stock

PURCHASE PRICE

Rp 44,000,000

MONTHLY RENTAL

Rp 1,950,000/mo

Up to 7% off for 12-month rentals

External dimensions	2.99 × 2.44 × 2.59 m
Internal dimensions	2.83 × 2.35 × 2.39 m
Capacity	1–2 guards
Lead time	Ready to ship in 3–5 working days

The 10ft Container Guard Post features a panoramic window for maximum surveillance, a built-in guard desk and a roof canopy that shields it from the heat. A side door gives guards easy access.

Ideal for factory gates, housing estates, parking areas and project site entrances.

SPECIFICATIONS

Frame	Original container frame + galvanized hollow-section reinforcement
Exterior wall	Corrugated steel plate (corten steel) 1.6–2.0 mm
Interior wall	PVC wall panels / GRC board, painted finish
Insulation	50 mm glass wool + aluminum foil
Ceiling	PVC panels + LED downlights
Floor	18 mm marine plywood + vinyl
Door	Steel panel door + mortise lock
Window	Panoramic 5 mm glass window
Electrical installation	900 VA, LED lights, 2 power sockets
Paint	Anti-rust epoxy primer + PU topcoat

FEATURES & INCLUSIONS

- ✓ Panoramic window
- ✓ Built-in guard desk
- ✓ Roof canopy
- ✓ Side door
- ✓ LED lights + power sockets
- ✓ AC bracket

Excludes 11% VAT & delivery. Prices may change without notice. Final prices are stated in our official quotation.

VIEW ONLINE
www.containermodifikasi.co.id/en/catalog/pos-jaga-container-10ft

DIMENSION DRAWING

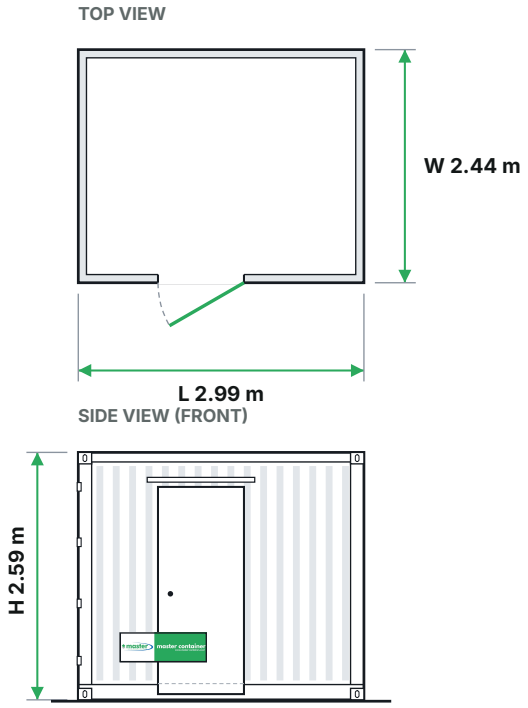

1 door — Standard outer dimensions; door, window & fitting positions can be adjusted.

ADD-ONS (OPTIONAL)

ADD-ON	BUY	RENT/MO
1 HP Split AC (unit + installation)	**Rp 4,750,000**	Rp 350,000
2-Camera CCTV + Alarm	**Rp 3,600,000**	Rp 300,000
Custom Paint Color + Company Logo	**Rp 4,250,000**	—

Excludes 11% VAT & delivery. Prices may change without notice. Final prices are stated in our official quotation.

VIEW ONLINE
www.containermodifikasi.co.id/en/catalog/pos-jaga-container-10ft